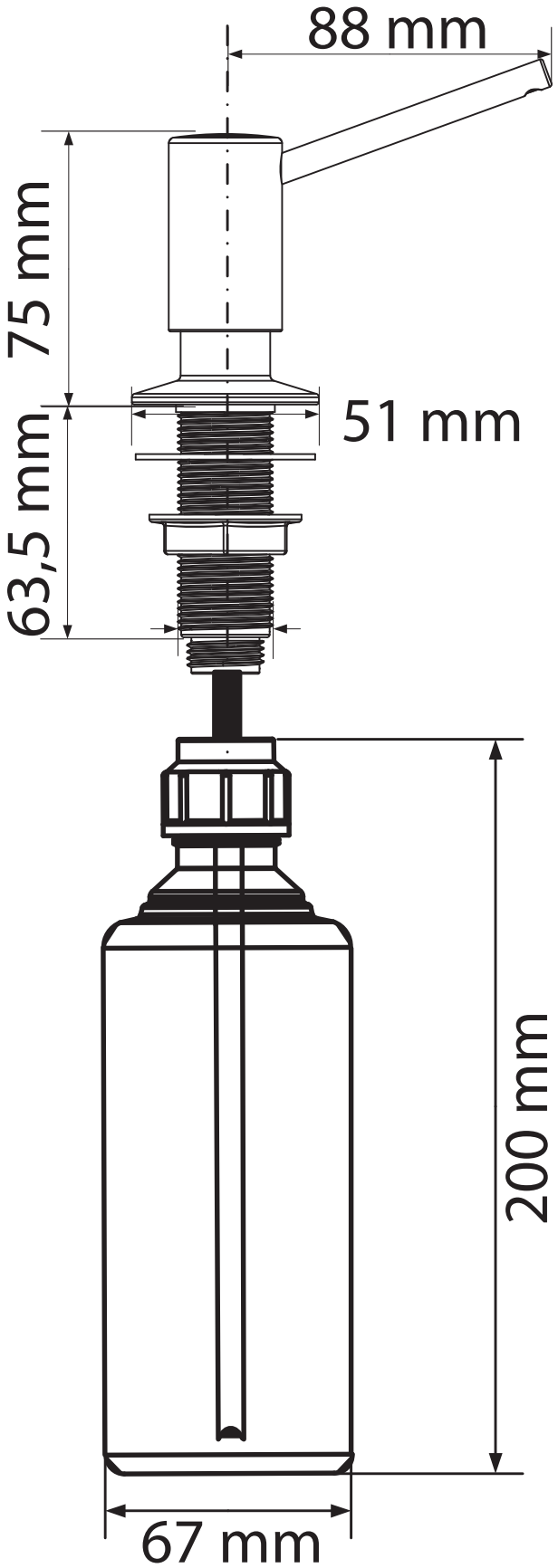
88 mm
75 mm
51 mm
63,5 mm
200 mm
67 mm